The perpetual energetic motion is possible in the fixed and mobile versions.

The perpetual energetic motion is possible in the fixed and mobile versions.

The perpetual motion of energy is possible. It is not where he was tried, but where we consume the most energy to overcome the force of gravity.

Abstract

This publication and deposits patent that preceded it, derive from a simple reflection: “If it is possible to exploit the hydrostatic head to save energy by pumping water up to overcome the force of gravity, it is also possible to transform the hydrostatic energy with the help of atmospheric pressure, not raising but pushing waters static downwards, after intubation of the same” Applying synergistically the continuity equation of Bernoulli, the principle of Pascal on the transmission of the pressure in hydraulic circuits that simultaneously using electric pumps and turbines, we can produce the maximum energy in the descending phase of the water and consume the minimum of energy in the phase of lifting, creating open systems where the geodetic suction and delivery coincide (open vessel). Or, closures pressurized, where inlet and outlet piezometric heights coincide (closed vessel). In the first case, we can make fixed installations that produce energy even while we raise and distribute drinking water, industrial, agricultural, for cleansing and protection against flooding, that at state of the art, are the works that involve the higher power consumption of the planet. In the second case, instead, we can realize hydroelectric plants movable with water tanks pressurized with compressed

air, which by means of a circuit partially open, in the phase of descent of the water, by means of a pump used as a turbine, produces energy, discharging the water in a small tank of disconnection, and a pump with a double feed that fits it into a partially closed circuit in the phase of return to the to the pressurized tank. Both in power plants in open vessel than in those hybrids movable using special electric pumps with low prevalence but equipped with double supply in suction side and anti-vortex and backstop devices which allow the insertion and mixing of the water to be lifted in the recycling circuit provided of greater hydrostatic pressure. In these circuits, fixed and mobile, the waters are not raised by the pumps but by hydrostatic pressures, natural or artificial. The mobile circuit, being the volume of water constant, the cushion of compressed air does not expand. Always it exerts the same pressure as the atmospheric pressure acts on those in the open vessel. For low system costs of fixed and mobile versions and high energy performance, which does not require fossil fuels or organic, even bulky, low energy efficiency, such as solar and wind power, we can finally talk about something that resembles the perpetual motion, without nuclear contraindications, although there is the inevitable consumption of machines and materials. But the perpetual motion never promised multiplication (for ten, or percent, or more) of the energy wich serves to run the pump. As happens in these plants, fixed and mobile.

Description.

The state of the art in the exploitation of water resources on land and hydropower generation has been conditioned by the absence of synergies between the pumps and hydraulic turbines and from the incorrect approach to the gravitational force, which is not to be won by the hydraulic lifting but sustained, with circulation of water one way in open reservoirs, placed in the top which also act as hydraulic disconnection. With the

triple synergy between the dual power supply pumps, turbines and water recycling in an open vessel, applying hydraulic principles known for centuries, such as the principle of communicating vessels, the laws of Bernoulli and Pascal, strategically placing the electric double inlet pumps (which does not exist but lacks only one mouth) between a high hydraulic head positive and the turbines, dimensioned for the exploitation of the same hydraulic load, the pumps, working with a balanced load, with a small energy consumption, win the state of inertia, allowing the transformation of 'pressure energy of the intubated water column overlying the pump into kinetic energy. Therefore the turbines produce energy also from stagnant waters, without the classical hydraulic jump. But with dual supply pumps we have the possibility to replace in the recycling circuit almost 50% of the nominal flow of the pump with water from a water reservoir placed at a lower hydrostatic level without the efficiency production is seriously affected, if not for a small decrease in yield. In this way we can produce energy even lifting the water. If we make everything smaller, replacing the open vessel with a pressurized water tank with compressed air; we use a pump multicellular as turbine, we insert it in a small tank of disconnection and use a pump with dual power at the same time to recycle the water coming out from the turbine and a part of the water contained in the pressurized tank, feeding the pump in the initial phase with a group of three-phase continuity, subsequently, managing the flow of water with control valves and the speed of the pump with inverter, we can realize energy mobile perpetual generators that will replace thermal engines of any size and power, with no consumption of fuel, even of water, but only a small percentage of the gases contained in the mixture of compressed air, which dissolve in the water.

Obviously, the system with pressurized tank can produce energy with only 50% of pump flow (that is disconnected from the circuit). In compensation, the circuit can be pressurized with compressed air, taken from the atmosphere, up to 35 bar. Not

coming out of the pressurized circuit nor air nor water, but only energy, we can talk to realize energy perpetual mobile generators which can replace thermal engines of any size and power, with no consumption of fuel. While hydroelectric plants with recycling of water in Open vessel in which the entire flow produces energy, can be considered perpetual energy generators in fixed version. These do not need to disconnect one side of flow rate during the recycle path to generate energy, since the open vessels, simultaneously function as energy producer, hydraulic disconnection, accumulators and water distributors. The plant founder who inspired this new way of producing energy, which is hundreds of times more clean and inexpensive of natural gas is submerged hydropower, that is patented in Italy on 06.10.2014 with the number of deposit CE2014A000012. This way of producing energy, is nothing more than a recycling of water in a vessel open to infinite size. As explained in a recent issue of the Journal of Earth Science & Climatic Change, hydropower submerged bring oxygen surface water in the polluted waters, improving oxygenation and would also produce lifts currents of sedimented nutrients that would increase the current production fish. But almost a year after its invention, the inventor has collected only silence on this most important invention, which has already generated by the same inventor these other new and imported inventions that demonstrate which is the way forward in the future for the environment and energy, while the current leadership wants to continue producing world-fossil energy which does not want to purify with the global systems, which also through the production of fossil energy would defeat CO2 emissions and produce alkaline waters to do battle acidification. Be silent also on the energy produced with water and air would be the last straw, since they could not do so in accordance with economic principles, it was never conceived so economic and clean energy. Who should intervene is the science that focuses on the deepening of the problems from the point of view of pure research and is silent on the synergistic or hybrid solutions. Continuing to silence, science takes the side of

those who continue to deepen purification systems and energy exceeded, which despite having developed high technologies can not efficiently fight nor pollution nor produce sustainable energy. These are the reasons why squander energy in treatment plants and water lifting, that instead, redesigned, become energy producers. No one has questioned scientific criteria that hydropower submerged functions. But everyone has been silent. If it works, even perpetual fixed and mobile energy it will work, because the principles that underpin the circulating water are identical. The inventor does not promise miracles, if we can avoid the consumption of fuel, the wear and tear of the machines can not be avoided. The perpetual motion of men has limits that can not be overcome.

The thermal energy in the world has taken over because the combustion has given the impression of being more powerful than the hydrostatic pressure and atmospheric and the world was the wrong approach in the exploitation of water resources, marine and terrestrial. It has not been achieved no synergy between the pumps and water turbines, which work in opposite ways at different plants.The pumps consume energy to lift the water, while the turbines produce energy using the water falling from above. Conceptually, they are not wrong, nor pumps, nor turbines, but they are wrong hydroelectric power plants and water lifting plants because pumps and turbines must be together. In rare cases we can harness the energy from the water without building large hydraulic works that often are environmentally dangerous and economically unsustainable, when the combination of pumps and turbines can produce hydroelectric power at very low cost even in a condominium.

But the pumps need to be changed, so that the gravitational force is used in the fixed-way, producing energy in the downhill by gravity of the water, but avoiding the energy costs of lifting. This is possible flanking always hydroelectric plants with recycling water in an open vessel,

by means of pumps with dual power supply on the suction side, which allow to insert in the circuit for recycling the water to be lifted and therefore supply turbines with recycled water, not raised. In this manner we will bypass the hydrostatic pressure that to win it behave more energy costs in the world, considering the large number of large and small plants present and needed in the world. Especially, considering that the current inefficient energy and purifying policy, waters of the sea will rise. With plants that I propose, all the pumps used in public facilities and energy for the distribution of water, with simple and dual fuel, will be fitted with the downflow: better exploit the hydrostatic head, the principle of communicating vessels, and Pascal's law on the transmission of hydraulic pressure to overcome the loss of pressure of the circuit, producing energy by recycling and even lifting the water to be distributed to the users and those defending the low territories and the city against high waters of the sea. The watershed for designing hydraulic and hydroelectric alternative was the invention of submerged hydroelectric plants by the undersigned, that are intubated vertical plants in the water, not yet realized, which still have not found industrial, scientific and political partners because even the media are not easily accessible to a pensioner, who base their inventions on their own experience of the technical designer of plants and on the 'observation of the deficiencies of the current systems, which for one reason or another, they are all incomplete, having never realized through synergies between different technologies and scientific principles. This is due, primarily, to the specialized one-way of designers, companies, and the tender specifications of the public that copy existing plants indefinitely improving technologies but without questioning the basic principles, born when there were no many technical knowledge to develop alternative energies. Today, after a few hundred years of refinements and research energy, thermal energy fixed and mobile it is still predominant because nuclear power has failed, hydrogen was never born. The

approach to the new energies, for myself, it was wrong, because it is focused on technologies bulky, expensive and with low yields, while hydropower with different solutions can be applied in stationary and mobile installations. But no one has studied in this direction. From simple calculations of the undersigned, it is a hundred times cheaper than coal and gas. It should not be extracted from the ground, it should not be refined and transported. Hydropower with recycle of water in the opened and closed vessel, arises from a deepening of the submerged hydroelectric plants, in which are inserted in series a submersible pump upside down, that pump down, and a turbine. Hydraulically they behave like plants under the head with recycling in an open vessel with size similar to infinity. In these simple systems, the hydrostatic head, measured in meters of water column is chosen after having carefully calculated the load losses in the turbine and in the tubes, to pose the axis of the pump in the exact point in which the positive head can be only balance the resistance to the circulation of water, including the turbine. The pump has only the task of winning the state of inertia of the water inside of the pipe which feeds the pump and the turbine, consuming very little energy, being positioned between two equal and opposite loads. The rotation of the pump, placed in such conditions, produces in 'whole overlying water column, the descent of the water separated from the static surrounding waters, with an energy of pressure (m * g * h) and kinetics ($1/2 * m * V^2$), which are used in the turbine to produce energy.

Assuming that the overall performance of thecoupled turbine and current generator is 0.8. The useful power can be supplied by a turbine which uses entirely the payload Hu than 50 m, with a intubated pump which has a flow rate of 1 m3/s, will be Pu = η*1000*Q*Hu/102 = 0,8*1000*1*50/102 = 392 KW; while for rotating the pump in the conditions of balance between the positive head and the turbine just a prevalence of a few cm of water column. Assuming to work with an electric pump which has

the same scope, prevalence 0.2 and 0.7 the yield, the power consumption is 2,8 KW (1000*0,2/102* 0,7). The ratio of energy produced and consumed is 392/2,8 =140. Nobody ever thought of being able to produce energy with infrastructure investment so low, withdrawal from renewable energy such as static pressure and the height of the hydrostatic pumps, although these are always considered in the hydraulic calculations for the determination of the heads of the plants and pumps prevalence for save energy in hydraulic lifts. I think that if it is possible to exploit the hydrostatic head to save energy by pumping water up to win the atmospheric pressure, it is also possible to transform the hydrostatic energy with the help of atmospheric pressure, not raising but pushing waters static downwards, after intubation of the same. In fact, when in nature occurs spontaneously, intubation of a vein of water flowing down a hill, through a valley and goes back up another hill, in the valley we can make the famous artesian wells that do not need pumps to lift waters. This means that, in addition to producing energy submerged we can exploit the energy of static pressure, natural or artificial also in other hydraulic applications. In fact, every invention opens the way for other inventions, if applied in different contexts. Before the world was made only one prototype of hydroelectric submerged, they were conceived by myself also other systems, like the “Hydro power plants with lifting, recycling and distribution of water in an open vessel” and “Generators perpetual with compressed air and recycling water “, which use the same hydraulic principles, in non-submerged installations. But these two important plant applications, which are essential for environmental protection, resource conservation and sustainable energy production can not be realized without the invention of the “dual supply inlet pumps,” which are part of a third patent application, because the bureaucracy of intellectual property, which no protects inventors but only industrialists, can not claim all in one invention.

To understand how a pump or a turbine dual fuel must be

observed FIG. 1 – 2 – 3, which shows changes to make on the suction side of the pumps and turbines; Fig. 4, which shows the mounting positions and possible links of a general scheme of lifting and water distribution, and recycling in an open vessel, which enables the production of hydropower; the Fig. 5 – 6, which shows the mounting positions of two patterns of recycling water mixed: in opened vase and closed pressurized, usable for the perpetual production of hydroelectricity (no fuel) on mobile means. As can be seen from Fig. 1 – 2 – 3, the suction side has been modified by dividing it into two symmetrical parts with flow separators and flanges. Particularly important it is the special piece (fdsfs) mounted at the pump to achieve the double feed. You may notice the separators flow sheet steel (fss) that divide into four parts the two feeding mouths of the pump and reach down to the rotating impeller (ai), where the metal sheets are shaped (sss) following the profile of the impeller same. The modification serves, in addition to the separation of the flows, to reduce turbulence and to avoid that the water pressure higher contrasts with the feeding of the water coming from the reservoir at the lower altitude, or atmospheric pressure, in the case of pressurized systems. In fact, the rotation of the impeller acts as an anti-return device. Also thanks to the pressure of the upper reservoir, increase the depression input on the side with lower pressure. They are known and widely experienced applications of pumps and turbines in which, the movement of an impeller to form a vacuum in the inlet pipe and the water circulating with a centrifugal acceleration which is proportional to the square of the angular velocity and the radius of rotation. In the cases that we examine we put the pumps in the same conditions in which, today, operate the turbines that exploit the hydraulic jump, but the equip of a dual power supply, so that in the body of the pumps and turbines can be to sum the inlet flow, while for the Pascal principle, the higher pressure spreads in all parts downstream of the input section by improving the energy efficiency of the turbines and saving

energy costs for lifting to the pumps. Obviously, the proposed amendments concern also and above all, the design of the plant, but if you do not change, especially pumps, as aforementioned, it is not possible to produce energy from those plants. Is so true that to the state of the art exists only hydropower that exploits the hydraulic jump, or currents of natural or artificial water, without the recovery and recycling of water. Unfortunately, manufacturers of pumps and turbines build machines to meet the needs of the plants. If the implants are wrong, from the energy point of view, also the pumps are wrong. Therefore, it is necessary redesign the systems and pumps not only save energy, but also to produce it raising and distributingthe water. In Fig.1 and 4 you can see one of the more common plants of the future. They will be together hydroelectric, lifting and water distribution. The flanged coupling with the container tube (tcp) of an electric axial inverted dual supply (caipds), allows the electropump to receive the flow of water intubated from two tanks at different heights and intubation of the common flow allows the cooling submersible motor. The same can be said of the pump multicellular per well of Fig. 2 and 4, instead of being coupled to an electric motor, carrying out the function of the turbine, is coupled to an alternator submerged, equally, it cooled by water circulation in the container tube , which also performs the function of the reservoir of disconnection (wsdr). The modified circulation pump (caipds) is a submerged intubated draining pump. For these pumps, the application is easier to understand and to realize: being equipped with a wide suction mouth connected to the pump body, where there is the impeller. No need to disassemble the pump, to change it and get with separate flows directly where the impeller rotation mix the two flows and sum them. But all current pumps and turbines can be changed in this way and you will find many useful applications in addition to those described herein. In fact, for the other types of pumps, not prepared for this application, manufacturers will change the mergers to get into the housing with separators. In particular, the pumps used as

turbines, which are fed by the current entering by delivery mouth, to turn the current generator mounted in place of the motor, should be changed by expanding the current delivery mouth, which, in this application, is a bottleneck which reduces the energy production. We do not enter into the merits of the technical problems that may result is the introduction of dual supply, that the reversal of the pump, are certainly problems overcome, before the great advantages that the applications behave. . We think that the market will demand the different applications and manufacturers of pumps to achieve them. In all cases, with the use of pumps with dual supply, from the delivery mouth the water comes out with the pressure supplied from the tank placed at the height higher, or from the pressurized supply tank, although only one side of the pump has been powered with this pressure. While in the case of the turbines used with dual power supply, can increase energy efficiency when they are fed from two tanks at different heights hydrostatic, as shown in Figure 4, both in the version with submersible pump (pat), and in the version of normal turbine vertical (htva). These applications, from the point of view of pressure, are nothing but the principle of Pascal applied dynamically. In fact, the hydrostatic pressure spreads in all directions in a closed tank, but if the flow of water is in motion, in the whole passage section. Obviously, in dynamic applications, the passage sections must be sufficient not only to transmit the pressure but also to add up the flow rates. In all cases the turbines are used together with the dual supply pumps, in installations completely filled with water, fitted with tubes of round trip for recycling the waters bringing them back to the upper level, spending only the energy required to win the state d ‘inertia of the water, and losses in the pipes, not the large energy required for lifting with the hydraulic circuits one-way, that are used today. In fact, in the plants completely filled with waterthere can be no movement without recirculation pumps. But if the plants are not full we can not talk of recirculation but of lifts, which require a lot of energy, having to

overcome the force of gravity. To save the energy required for lifting is necessary to transform all lifting applications in recycling plants in open vessel, where the geodetic heights of suction and delivery coincide; Moreover, by replacing the pumps lifting with dual supply pumps and entering the circuit also turbines, we can transform the existing lifting equipment, from large energy absorbers in electric power producers. It 'important to note that every mouth of the pump and turbine with dual supply, must be supplied individually (under the hydrostatic height calculated to overcome the pressure load of the turbine), starting from the level of the pelvis upper feed, as is the case with the' supply of current turbines, while the ascent of water to the upper reservoir, can occur by means of a large common collector (c). In fact, are the descents of water ducted individually for each group of a pump and a turbine to produce energy. At the turbine outlet, we have a simple pressure drop at the outlet, which depends only on the remaining kinetic energy (V2 / 2g), regardless of the depth at which occurs the outlet. This happen because the level at the intake and delivery of the pump coincide and are in the same tank. In the submerged implants are involved only the waters that enter the top tube and coming out in the backdrop, which, change position and dissipate into heat energy remaining in the same backdrop. Hydroelectric plants born from the change of pumping stations, shown in Figure 4, are similar, hydroelectric plants submerged realized in a well, where for the absence of volumes of water needed, not all the residual energy can dissipate in heat, and the water is forced to rise upward, but not being able to exceed the level of the water that feeds the pump, the energy that is consumed is that due only to the pressure drop in the riser tube, which It depends only on the speed of the water and from the coefficients of friction on the walls, easily calculable for circular sections with the formulas of Bazin, [where the head losses in m/km = 1000*4*V2/C2*D, dove C= 87/(1+2γ/√D), where γ is the average coefficient of roughness = 0,16, the speed in m/s, the dimension in m]. Other formulas

of other authors, are equally valid. These head losses can be overcome by increasing the pump head, or the hydrostatic level in aspiration. For energy purposes, it is preferable for the second solution. Obviously, the same reasoning is also valid for the connecting tube (csp) between a reservoir and the other which can be several kilometers long. Considering, for example, that the transport of 1 m3 / s with a pipe Dn 1000, with the formula of Bazin cited above, involves the loss of load of 1.5 m / km, for a distance of 10 Km should a plant lifting with the prevalence of 15 m, adding 2 m for special pieces and the loss at the outlet, the pump head becomes 17m. With elctropumps yield 0.7, it require an energy consumption of 238 Kw (1 * 1000 * 17 /102 * 0,7). This energy expenditure and the electromechanical works to achieve it are outdated spacing along the way in recycling plants in open tank with pump and turbine dual supply (Figure 4).

The laws of hydraulics are clear, both as regards the exploitation of the suction head of the pumps (SGH), both as regards the load losses in a hydraulic circuit in an open vessel, from which depart the waters aspirated and return those pumped. The positive head to be carried on the pump shaft and given by the sum of the useful height (Hu) request from the turbine plus the head losses in the pipes (pdc) and to the outlet (pds). The length of the water network that connects the tanks (wddr) can be charged to the hydrostatic head. In fact, if we increase the distance between a dock and the other, we need not increase the prevalence of the pumps but the height of the basin on the pumps which costs much less. Increasing the diameters of the tubes reduce the height of the plants and the operating pressures. The prevalence to be allocated to the pump is “H” is equal to the sum of:: (+) Hgea (-) Pdc (-) Pds, where:

Hga (m) = (sgh) geodetic suction: distance between the upper level on the suction side and the axis of the pump. Hga, in our case, for energy purposes, is positive, because the pump

is subjected to the water level.

Pdc (m) = sum of all the losses of load of the system, which, for the purposes of absorbing the pressure energy are to be considered with a negative sign. In our case, they are represented by the descent tube, the special pieces, the resistance to the rotation of the turbine, the velocity in the pipe (rst) of connection to the vessel.

Pds (m) = pressure loss at the outlet in the collector and in the upper tank (V^2 / 2g).

Never exceeding with the tube (rst) the level of the basin (wddr), by pumping in the direction of the atmospheric pressure, the prevalence of the plant tends to zero by balancing the load losses with the hydrostatic head. Obviously, to have the maximum energy produced should concentrate the load losses in the turbine reducing the other, expanding the diameters of the pipes and reducing the lengths. It is not the pump to raise the water, but without the dual power supply of the pump the water would not be able to be inserted in the circuit from the suction side to be lifted without energy costs. In fact, the closing of the valve (sav) that feeds the left side of the pump (with or without passing through the turbine), allows to feed such side with the water of the basin placed at the lower level, the mixing and the sum of the two flow rates, which occur in the pump, enable recovery of the maximum hydrostatic level of the upper tank without appreciable energy consumption. Reached that level, closes the water supply to be lifted (sov) and opens the supply again with the water recycling of the upper basin (sav), until the water level is lowered by new and requires a new lifting. Obviously, this system can be used for large and small flows and large and small differences in height. Producing in all cases energy by consuming very little for the recycling in the open vessel, which also includes the lifting of water that fits in the recycling loop. But the system can

also work constantly raising the quota overflow waters of areas subject to flooding and flooding, without energy costs, but producing energy. In fact, the pipe overflow (or) can be diverted to channels of works of hydraulic territories (dthcd). In other words, we can produce energy taking low waters, instead of consuming energy.

The FIG.5 shows a perpetual current generator with compressed air and recycle water, which can be made in miniature to make it enter in a bonnet of a vehicle in place of the thermal engine, or in a more enlarged at other mobile means that require more power, agricultural vehicles, trucks, ships, planes, trains. The perpetual current generators with compressed air and water recycling of FIG. 5, are born from the same hydraulic principles of those submerged: instead of atmospheric pressure, exploiting the pressure of the cushion of compressed air on the water surface, instead of atmospheric pressure, exploiting the pressure of the cushion of compressed air on the water surface, inside the reservoir (ptr). Like the submerged implants, they have the need to dissipate the pressure energy and kinetic energy in the turbine to transmit mechanical energy to the alternator Which Produces electrical energy. This implies the need to discharge the water in an open tank (wsdr) (which has a different shape only to adapt to the characteristics of operation of the turbine or pump used as a turbine, but the concept is identical) arranged below and thereafter, pumping it back into the pressurized reservoir. This implies the need to discharge the water in an open tank (wsdr) (which has a different shape only to adapt to the characteristics of operation of the turbine or pump used as a turbine, but the concept is identical) arranged below and thereafter, pumping it back into the pressurized reservoir. But with the hydraulic scheme proposed and with the pump in dual fuel fed from a side, with the water drained from the turbine and the other directly from the pressurized tank (ptr), it is possible to let the water at atmospheric pressure through the the suction side of the pump in the pressurized

circuit and recycle it to produce new energy by exploiting the same pressure of the same pressurized vessel, without which varies the pressure in the tank, as the volume of water does not change. In fact, the pump flow returns to the the pressurized tank, passing through the valve (sov) and the check valve (CV). All operations are carried out below the air cushion, without varying the volume of water present in the tank (ptr). Happening the circulation of water within that volume, the prevalence of the recycling pump can be very low. It does not depend on the pressure of the air cushion, since the water does not compress. The system works differently from what occurs in the autoclave tanks (we all know), where water does not return to the tank, therefore the air pressure decreases, and require energy by the part of the pump to be restored. Therefore the pump in the case of the autoclave must have a prevalence equal to the tank pressure (ptr). In our case, we can say that we steal the pressure and the water to the tank (ptr) to turn the turbine, without the pressure gauge of air pressure control, and the controller level (mpl) noticing, as if we were in a closed loop, because the air does not come out from the tank and the amount of water coming out, immediately returns to tank (ptr) But the closed circuits can not produce energy, just because of the impossibility to transform the pressure energy into kinetic energy and the contrary. In fact, in our case, the circuit is hybrid, half opened and half closed. It all happens at the same time: the turbine uses the entire pressure (ptr), and about 50% of the pump capacity to produce energy, discharging the water in the tank of hydraulic disconnection (wsdr), which is kept at atmospheric pressure, while by the pump with dual supply, the entire flow returns to tank (ptr), as if it had recycled 100% of the capacity of the pump, without that no part of water had passed through the turbine and the reservoir of disconnection, that, instead, during the recycling they have produced energy with 50% of the capacity of the pump and the entire tank pressure. Therefore, 100% of the capacity of the pump returns to the tank pressurized, as a common recycling plant in the

closed vessel, without lowering nor the water level nor the pressure of the tank. Therefore, even in these plants, as in submerged implants, the load losses of the turbine are won by the positive head of the water column on the pump that circulates the water with a very small head of the pump. In the case of submerged hydroelectric, the pressure is provided by the atmosphere and by the water level on the pump, in the generator perpetual movable by the air cushion which also replaces much of the water column. Also in this case, at the turbine outlet, in the tank (wsdr), we are at atmospheric pressure and we have to consider only the pressure loss at the outlet (V^2 / 2g). Right after starting the recycling loop in closed vessel, which does not produce energy. but takes advantage of the pump with dual supply to recycle all the water in the pressurized tank. This part of the circuit is not different from a recycle loop in an open vessel, if one considers that the piezometric heights of suction and delivery coincide. There is only the branch of the second suction mouth which inserts the water that exit from the same reservoir (ptr), after having passed through the turbine and the tank disconnection returns to the pressurized circuit through the pump. It does not matter that the pump is a low prevalence, since the separators of the flow and the rotation of the impeller prevent the return of water to the tank of disconnection. In addition, the pressure in this circuit is only static, being equal on suction and delivery of the pump, For the Pascal’s principle in the body of the pump the pressure becomes uniform, the whole volume of circulating water returns to the liquid volume of the tank pressurized without having to spend no energy to increase the pressure of the circuit. In closed pressurized circuits for the calculation of the prevalence of the circulation pump does not count the pressure of the air cushion but only the load losses in the pipes of the circuit, which in this case are minimized. In fact, the pressure inside of this circuit is static. In order to circulate the water, the pump must overcome only the

state of inertia and the friction on the parts of the tubes. These small pressure loss can be overcome by the head of the pump or from the residual pressure at the turbine outlet, which is derived, however, by the pressure of the air cushion in the tank (ptr). In an perpetual power electric generator without fuel, the main role is played by dual supply pumps, which for the above reasons absorb very little energy and can be fed, at start up, by means of an electric battery as current engines and thermal generators, with the only difference that these must continue to be fed with fuels while the generators perpetual use the energy accumulated by the pressure of the air or gas and by recycling water in the system. For this reason they may be called perpetual, not having to stop to fill up on fuel, at least until the gas content in the air, water disciolgano, excessively lowering the pressure. The pressure could lower after a few months, but this can be avoided by mounting on board a small compressor. The main stages of starting up the, which should happen automatically, with the inclusion of key control or the “start” button is as follows:

1) You close all valves (sovfa) and (sov) that intercept upstream and downstream of the reservoir of disconnection (wsdr) that communicates with the atmosphere through the vent valve and ventilation (which does not pass the water).

2) With the valves of the point 1closed it is put into service the pump (caipds), by means of a three-phase UPS equipped with a battery, rectifier, alternator-inverter, powered by the same energy produced. In the initial phase of start-up the water circulates entering a single suction mouth but immediately after the departure will also open the valves which intercept the tank of disconnection (wsdr) and the water can also feed the second feeding mouth of the pump which brings the water used by the turbine to produce energy. This water, which is at atmospheric pressure, is inserted in the circuit of a pressurized recycle right from the second supply inlet of the

pump which allows the mixing in the impeller with that working with the static pressure of the pressurized tank.

3) When the alternator is connected to the turbine starts producing energy, can be excluded the starting circuit and run the circulation pump with the energy produced. What is important, is the use of a control system of the pump speed with inverter for the constant management levels (mpl) of the two tanks (pressurized and disconnection), since an excess of tank pressure with respect to the dissipative capacity of the turbine leads to increased speed of the turbine and a greater flow rate, which raises the level (mpl) of the tank of disconnection (wsdr), while a reduction in pressure can lead to a lowering of the level, a reduction in flow rate and powerIt delivered and the entrance of air into the circuit. Adjustments must be made in exercise and automatically, especially thanks to the speed of the pump.

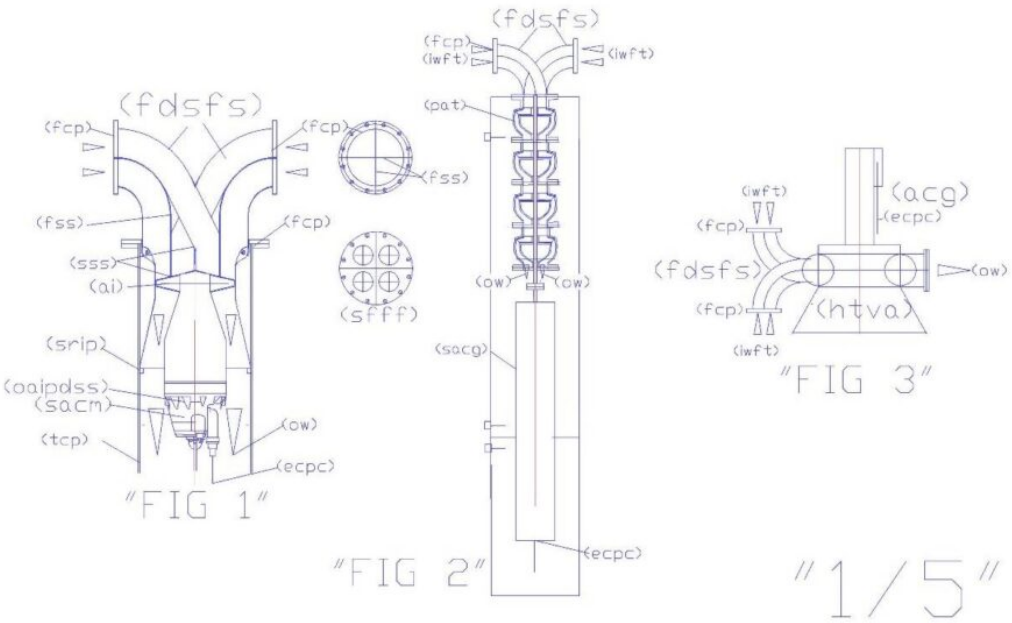

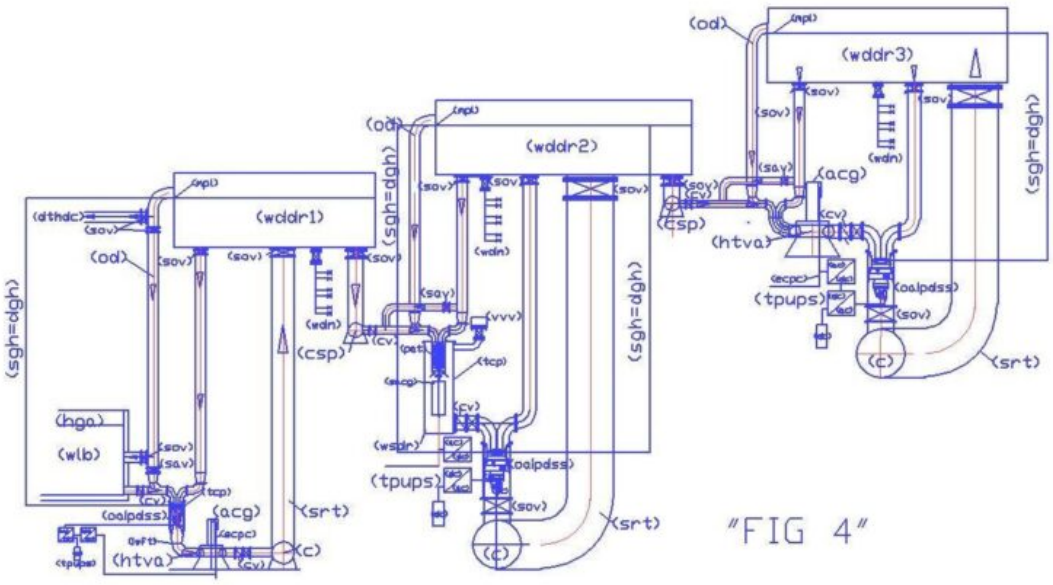
(wddr1)
(wddr2)
(wddr3)
(od)
(sgh=dgh)
(srt)
(c)
(csp)
(htva)
(acg)
(tpups)
(oalpdss)
(sov)
(hga)
(wlb)
(tcp)
(vvv)
(wdln)
(sav)
(cv)
(ecpc)
(dthdc)
(wsdr)
(pat)

"FIG 4"

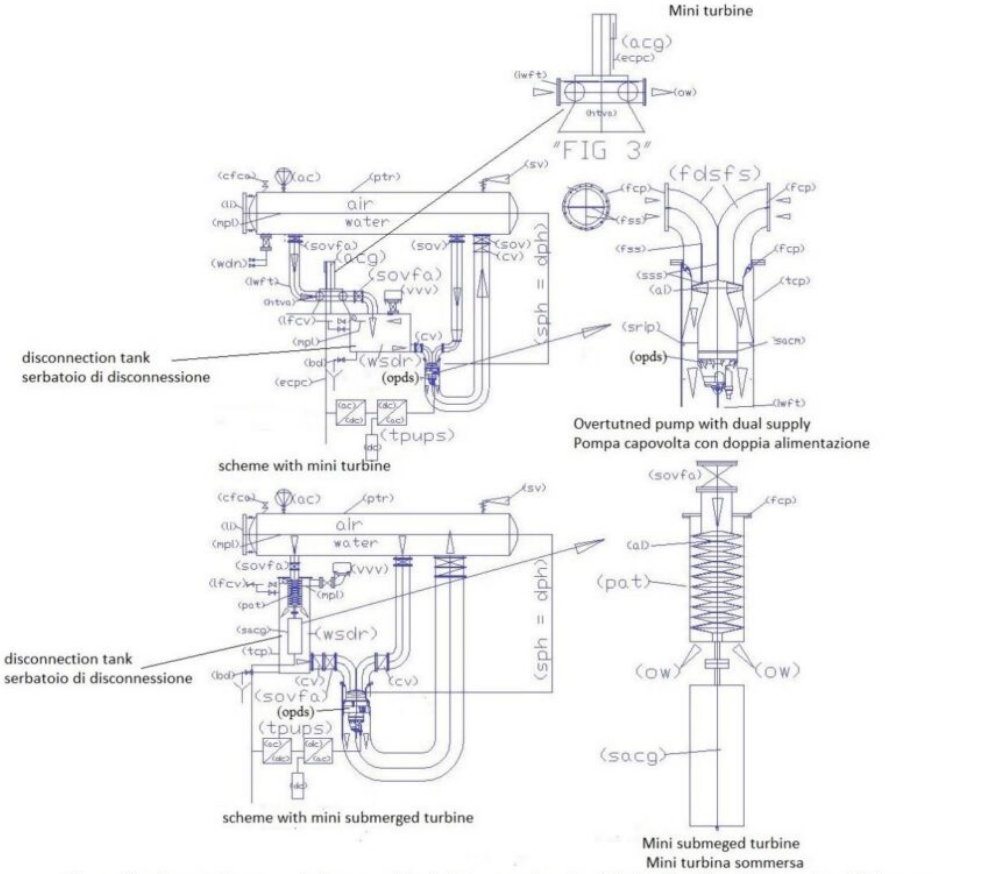

The coupling of an autoclave pressurized, a pump with a dual power supply and a mini hydraulic turbine allow to produce infinite energy consuming only the compressed air or the gas that chemically dissolves in the water. The electric energy storage battery serves only for starting, as in existing internal combustion engines.

L'accoppiamento di una autoclave pressurizzata, una pompa con doppia alimentazione e una mini turbina idraulica consentono di produrre energia all'infinito consumando soltanto l'aria compressa o il gas che si dissolve chimicamente nell'acqua. L'accumulatore di energia elettrica serve solo per la partenza, come negli attuali motori termici.

Hydroelectric plant pressurized with compressed air - Impianto idroelettrico

Legend of drawings: (ac) air compressor; (acg) alternating current generator; (ai) axial impellerle; (C) collector; (caipds) capsid axial intubated pump with dual suction; (cfca) connection for fast fill compressed air; (csp) connection systems pipe; (cst) containment system tube; (cv) check valve; (dgh) delivery geodetic height (dthdc) deviation towards hydraulic drainage canals; (ecpc) electrical current produced cable; (fcp) flange for coupling to the pump; (fdsfs) flanged dual supply and flow separator; (fss) flow separator in sheet steel (htva) hydraulic turbine with vertical axis; (iwft) inlet water to feed turbine; (lf) lift ring; (lfcv) level floating control valve; (mpl) probe of the minimum or maximum level; (pat) pump as turbine; (ptr) pressure tested reservoir; (od) overflow discharge; (pat) pump as turbine;

(pwa) pump with autoclave; (sav) supply additional valve; (sacg) submersible alternating current generator; (sacm) submersible alternating current motor; (sfff) special flange with four feeds; (sgh) suction geodetic height; (sov) shut-off valve; (sovfa) shut-off valve with flow adjustment; (sph) suction piezometric height; (srip) supporting ring for intubate pump; (srt) supply reservoir tube; (sss) shaped sheet steel; (sv) safety valve; (tcp) tube containing the pump; (tpups) three-phase UPS; (wdn) water distribution network; (wddr) water distribution and disconnection reservoir; (wsdr) water disconnection reservoir.

To complete the argument is shown below a summary of the application for a patent that has given rise to this incredible energy system fully compatible with the environment and the world economy. This system has already been described in the previous article of Journal of Earth Science & Climate Change, entitled Synergic Plant, Artificial Welling, Hydroelectric Energy (SPAWHE)

DESCRIPTION OF INDUSTRIAL INVENTION CE 2014A000012 Dated 06/10/2014

(This patent demand may be extended to the international level within 06 – 10 – 2015)

SUBMERGED HYDROELECTRIC PLANTS FOR ENERGY PRODUCTION, OXYGENATION OF SEABED AND ARTIFICIAL WELLING

By Luigi Antonio Pezone

“The submerged hydroelectric energy without hydraulic jump” does not require big investment and can be implemented in lakes, seas, and reservoirs, oxygenating the polluted seabed. Hence, it is an energy that protects the environment. Moreover cheaper than any other energy using an energy that exists everywhereand we had always at hand, since it is present in the waters that cover three quarters of the earth. We are accustomed to use electric pumps to lift the water but we can also use it to push the water down. Let us take the simplest case, that of the axial pumps intubate, just flip them and install them in 20 – 30 – 50 – 100 m depth in lakes and seas and under them, in the same tube, insert a turbine still intubated. The pump rotation produces pipe inside the movement of a mass of water (m) downwards but the pump only serves to win the State of inertia of the water and to determine the flow rate (m), depending on the size of the impeller of the tubes. The downward thrust is determined by the inclination of the impeller blades, and above from the water level on the suction side. In other words the rotation of the pump also triggers the conversion of the pressure energy (m * g * h) into kinetic energy (1/2 * m * V2). All this energy can be transformed into electricity, by entering the pump under a turbine coupled to a current generator. If the implant is housed in a hermetically closed tank, does not produce energy not being able to exist the circulation of water. If we are in a small pit, where the water outlet of the turbine is forced to go back to the top, we can calculate the energy that is opposed to energy production, leading to the ascent of the water and therefore the power which absorbs this lift (P = Q * h / t). In systems implemented in large basins the time “t”

lift, place the denominator of the expression tends to infinity and therefore the power that opposes the exit of the turbine tends to zero.

In any case, even in a well, there is a significant difference of passing and sections of water speed: In downhill turns quickly pressure energy into kinetic energy to produce electrical power, while in the ski lift, the inverse transformation of energy not consumed in the turbine (to produce electricity) from energy kinetics of pressure takes place with a very long time, that are not compatible with a power calculation where the time factor is crucial. In the expression that is used to calculate the prevalence of a hydraulic system without geodetic difference (submerged) Ht = (Pu – Pi) + (Vu^2-$Vì^2$)/2g +$\sum_{v.}$ Being a constant hydrostatic head, we can consider (Pu – Pi) equal to zero; being very short paths of the pipes, the pressure drop (Σv) we may consider all in the turbine; Therefore, the energy difference between the descent and ascent of the water is concentrated all on the difference of kinetic energy [(Vu^2-$Vì^2$)/2g]. If the section of the basin is large, the speed of ascent towards the atmosphere is less, therefore, the exploitation of the energy is higher than hydrostatic. With a small absorption of the electric energy, in the downward path, we can cross the turbine with kinetic energies of tens of times higher than those of lifting installations. Not having to win with the pump any resistance in the circuit but only ensure the circulation, it is not surprising if spending only a few Kw (4000*0,2/102*η = about 10 kw), the marine or lacustrine hydroelectric plant, located fifty meters deep that circulates 4 m^3/s creates an electricity about one hundred and fifty times higher than that absorbed by the pump.

Suppose we make two central “hydroelectric submerged” with different solutions starting from a water flow of 4,000 L / s, making a total fall (Ht) of 50 m, we choose a submersible pump

ducted in a tube (wdt) Dn 1400 to create of facilities for the installation of the pump at a depth of 50 m. With a flow of 4.000 L/sec, V = 2,6 m/sec, the pressure losses in m/km calculated using the formula of Bazin ($1.000*4*V^2/C^2*D$) where ($C= 87/(1+2g/\sqrt{D})$ and a roughness coefficient γ=16, are 4,11 m/km, for a total of 0.20 m. n the case of the use of radial flow turbine with external alternator (dis. ½), the pressure losses localized in the reduction of input to the turbine with D_2 = 700 mm (V_2 = 10,4 m/s) are 2,75 m ($0.5 *V_2^2/2g$); the pressure losses in the 90 degree bend are ($0,5* V_1^2/2g$) = 2,75 m, Therefore, the effective height (Hu) at the turbine inlet becomes about 44,3 m, assuming that the overall performance of the machine is 0,87, the useful power delivered by the turbine will be Pu = η*1025*Q*Hu/102 = 0,87*1025*4*44,3/102 = 1.549 KW. In the solution ducted vertical, assuming that the performance is the same and that the turbine enters easily into the pipe Dn 1500 (the pipe is more than 10 cm wide to hold the turbine) there are no other pressure losses, except those required by the turbine therefore, the positive head of 50 mt (Hu) are fully utilized and the power efficiency gains are higher: 1.748 KW. It is important to note that the water that feeds the pump which, in turn, feeds the turbine, thanks to intubation, is separated from the surrounding water and can have its own specific hydrostatic pressure which is transformed into kinetic energy concentrated on the blades impeller as terrestrial plants. Therefore, the implants can be sized hydraulically with the principles legislated by the Bernoulli". This is very important because without intubation of the pump that feeds the turbine would have had only a recycling of water around the pump and the turbine without the production of energy, since it would not have created a gravitational flow separated from the static mass of the water of the basin, which starts from the surface layer of the water.

These plants, which will cost very little because it does not

require great works like dams, reservoirs, can be environmental protective carrying the oxygen of surface waters in seabed and create little currents lifting that produce are cycling of nutrient and carbonates deposited in seabeds that increasing overall oxygenation, then the self-cleansing, fitoplacton production and zooplankton, with naturally fish production without artificial feed and nurseries.

Legend of drawings

(acg) alternating current generator; **(acr)** auto centering ribs; **(apc)** atmospheric pressure chambre; **(bc)** bridge crane; **(cdip)** capsid dewatering intubated pump; **(cs)** coastal seabed; **(cddw)** cone diffuser outlet water; **(dp)** drainage pump; **(edn)** electricity distribution network; **(fsp)** **f**lange for support pipe; **(htva)** hydraulic turbine with vertical axis; **(iht)** intubated hydraulic turbine; **(ipc)** imput power cables; **(iwfp)** inlet water to feed pump; **(lf)** lift ring; **(mfp)** modular floating made of polyethylene; **(na)** navy anchor; **(nl)** night light; **(of)** oversized flange; **(oow)** Output oxygenated water; **(pc)** power cable**; (sn)** safety net; **(srdp)** supporting ring for dewatering pump; **(srit)** supporting ring for intubate turbine; **(ssfp)** supporting structure floating platform; **(tva)** tube for ventilation and access; **(ufc)** upper funnel Cone; **(vcw)** ventilation cover waterproof; **(vt)** voltage transformer; **(wdt)** water descent tube.

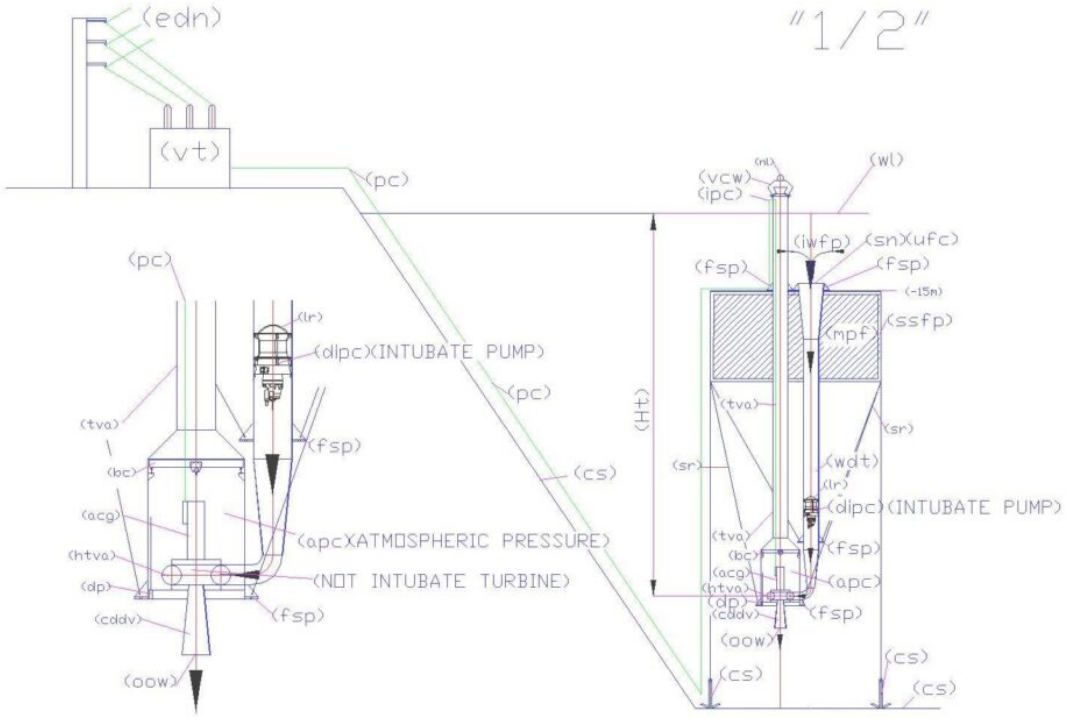

SUBMERGED HYDRAULIC ENERGY WITHOUT HYDRAULIC JUMP AND WITH SEABED OXIDATION

The drawing. "1/2" fig. 1 shows schematically the system with radial flow turbines with vertical axis. From the top, you can see the floating structure (mfp-ssfp) subjected to sea level of 15m; the descent tube of the water that carries the axial submersible electric pump with the suction upwards; the reduction in section and the curve that connect to the turbine, which drains the water from the bottom through the diffuser cone (cddw). The turbine (htva) is contained in a steel chamber at atmospheric pressure (apc), with a small bridge crane for possible maintenance operations. In this solution the turbine remains incorporated in the chamber, any repair and replacement of worn parts must be made on the site, while there is the possibility of extracting the alternator through ventilator tube and access (tva), after disassembling of the terminal element (vcw) which serves to keep out rain water and high waves that will exceed even the terminal element. Inside the room, however, is expected to pump lifting water and condensate level control (dp). On the terminal (vcv)

is mounted night lamp (nl) to indicate the presence of the plant. You may notice the electrical wiring path (pc), the central energy conversion (vt) and the distribution network (edn).

The **fig. 2** is an enlargement he lower part of the system described above.

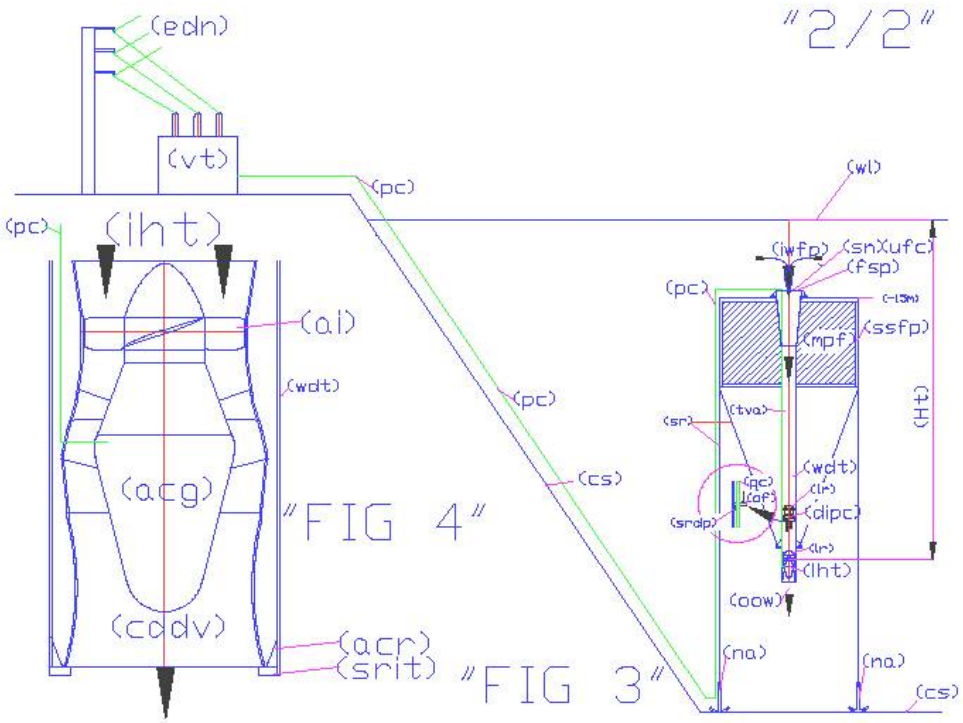

The drawing "2/2" fig. 3 riporta schematically the system with intubate turbine. This solution has been designed to provide not surface in any area exposed to storm surges. It is 'the ideal solution. But, currently, these turbines are installed at a maximum depth of 15 m. Manufacturers will have to improve the mechanical seals of submerged parts that protect the electrical components and the lubrication system, if you want to install the turbines at depths of 50 m and beyond. It can be noted that the plant with this solution is much more simple and economical. In fact, in the same descent tube water (wdt) is mounted before the pump (dipc) and subsequently also the turbine (iht). In fact, as can be seen from the detail circled

the pump will be equipped with a Oversized Flange (of) that rests on the support ring (srdp); cables pass through the flange of the pump power and also the power cables (pc) alternator (acg) of the turbine, which rests on the ring end (srit) driven by self-centering ribs (acr). Obviously, the electrical cables must be protected in metal pipes and to bring out the turbine must first remove the pump. You may notice the electrical wiring path (pc), the central energy conversion (vt) and the distribution network (edn). The **fig. 4** is the enlargmentof turbine (iht) and of the support system in the tube (wdt)

Lu8igi Antonio Pezone